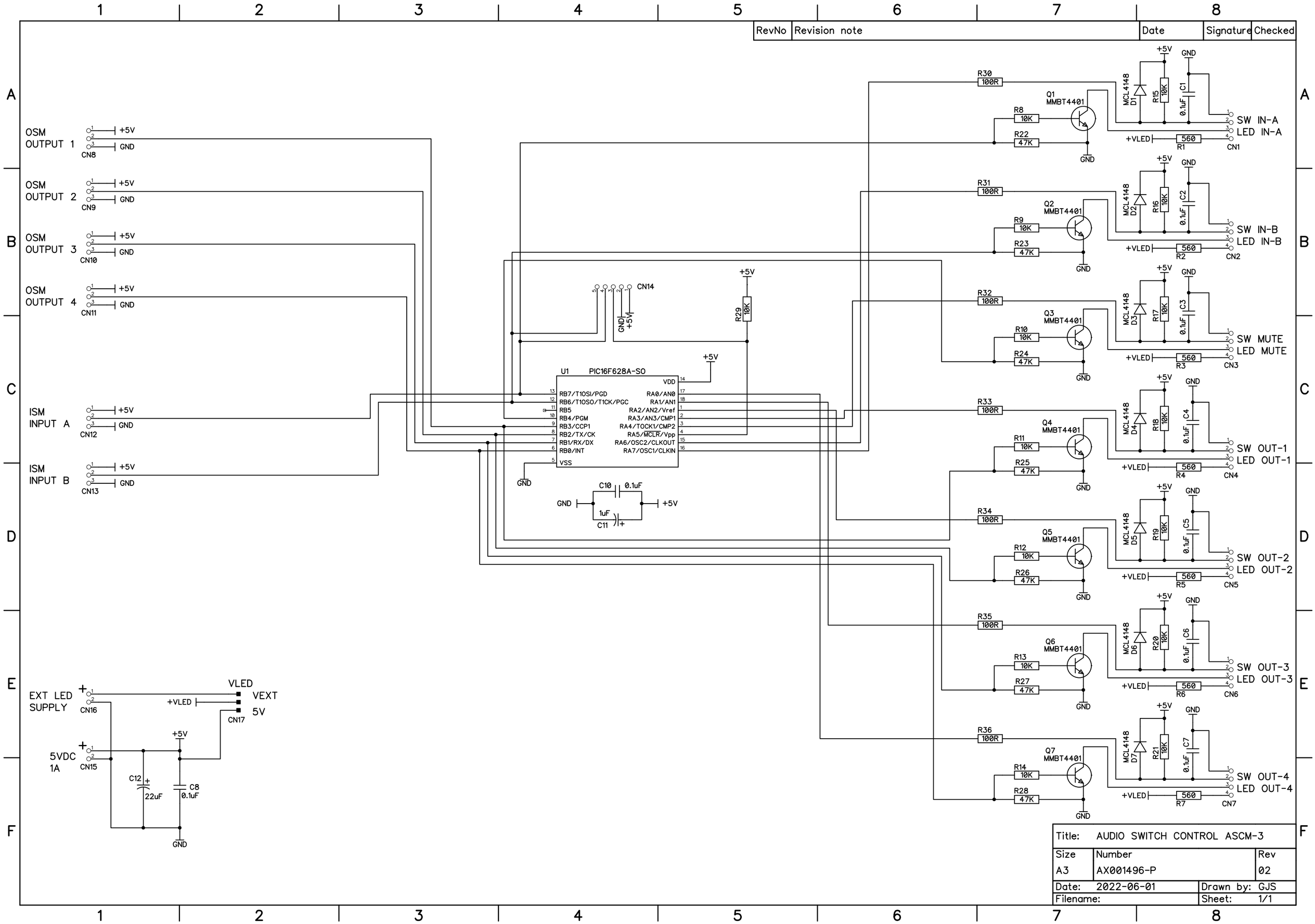
RevNo
Revision note
Date
Signature
Checked
OSM OUTPUT 1
CN8
OSM OUTPUT 2
CN9
OSM OUTPUT 3
CN10
OSM OUTPUT 4
CN11
ISM INPUT A
CN12
ISM INPUT B
CN13
EXT LED SUPPLY
CN16
5VDC 1A
CN15
VLED
VEXT
5V
CN17
+5V
GND
+VLED
C12
22uF
C8
0.1uF
U1
PIC16F628A-SO
RB7/T1OSI/PGD
RB6/T1OSO/T1CK/PGC
RB5
RB4/PGM
RB3/CCP1
RB2/TX/CK
RB1/RX/DX
RB0/INT
VSS
VDD
RA0/AN0
RA1/AN1
RA2/AN2/Vref
RA3/AN3/CMP1
RA4/TOCK1/CMP2
RA5/MCLR/Vpp
RA6/OSC2/CLKOUT
RA7/OSC1/CLKIN
CN14
R29
10K
C10
0.1uF
1uF
C11
R30
100R
R31
100R
R32
100R
R33
100R
R34
100R
R35
100R
R36
100R
Q1
MMBT4401
Q2
MMBT4401
Q3
MMBT4401
Q4
MMBT4401
Q5
MMBT4401
Q6
MMBT4401
Q7
MMBT4401
R8
10K
R22
47K
R9
10K
R23
47K
R10
10K
R24
47K
R11
10K
R25
47K
R12
10K
R26
47K
R13
10K
R27
47K
R14
10K
R28
47K
MCL4148
D1
D2
D3
D4
D5
D6
D7
R15
R16
R17
R18
R19
R20
R21
10K
C1
C2
C3
C4
C5
C6
C7
0.1uF
560
R1
R2
R3
R4
R5
R6
R7
SW IN-A
LED IN-A
CN1
SW IN-B
LED IN-B
CN2
SW MUTE
LED MUTE
CN3
SW OUT-1
LED OUT-1
CN4
SW OUT-2
LED OUT-2
CN5
SW OUT-3
LED OUT-3
CN6
SW OUT-4
LED OUT-4
CN7
Title: AUDIO SWITCH CONTROL ASCM-3
Size
A3
Number
AX001496-P
Rev
02
Date: 2022-06-01
Drawn by: GJS
Filename:
Sheet: 1/1